Data Sheet D184S042U02 Rev. 03

FAM3200 (10A3200) Armored Purgemeter

Function

— The armored variable area flowmeter offers new possibilities for metering small flowrates of liquids and gases. The instrument is particularly well suited for metering cloudy, opaque or aggressive fluids

Application

— The instrument can be installed in Chemical, Petrochemical and Pharmaceutical Industries, gas analyzers, process systems, well systems and wherever glass meter tubes cannot be used for safety reasons

Essential Features

— Min. flow range: 0.1 to 1 l/h water;
max. 300 to 3000 l/h water, up to 89 m^3/h (Qn) air
— Easy to read percent or direct reading scale
— A needle valve in the in/outlet (10A3220)
— Min. and/or max. alarm signal transmitter
— Analog current output 4 ... 20 mA (not Ex) (10A3250/55)
— Differential pressure regulator (10A3220)
— Installation length only 90 mm (10A3220)
— Gas damping > 3200 l/h air
— Stainless steel housing

Fundamental work safety notice

Safety standard of equipment

- This instrument corresponds to the basic safety requirements of the Pressure Equipment Directive and has been designed using state-of-the-art technology. It was tested at the factory, based on the safety requirements, and shipped in proper working order. In order to maintain this condition over the expected life of the instrument the requirements described in this operating manual must be observed and followed.
- Please note the special information provided for commissioning the explosion-proof equipment version.

Instructions for the use of pressure equipment functioning on the "measuring principle of suspended solid matter"

This instrument is used

- to measure during the transport of liquids, gases (including unstable gases) and vapours
- the volume flowrate under constant operating conditions (pressure, temperature, density). The flowrate can also be converted to standard and mass units.

To correct usage includes:

- use within the specified values
- observing and following the information relative to allowable fluids
- observing and following the instructions in the operating manual
- observing and following the information in the accompanying documents (specifications, diagrams, dimensions)

The following usages are not permitted:

- operation as a flexible adapter in piping, e.g. to compensate for pipe offsets, pipe vibrations, pipe expansions etc.
- use as a climbing aid, e.g. for assembly purposes
- use as a support for external loads, e.g. as support for piping etc.
- material loss e.g. by drilling the housing or material gain e.g. by painting over the factory panel/type plate or welding on or soldering parts
- repairs, modifications and supplements or the installation of spare parts is only permitted if undertaken as described in the operating manual. More extensive work must be agreed with us beforehand. We assume no liability for unauthorized work.

The operating, maintenance and repair conditions stated in this operating manual must be observed. The manufacturer assumes no liability for damage caused by usage which is improper or prohibited usage.

Technical limit values

The equipment is only designed for use within the technical limit values specified on the data tag and in the operating manual. The following technical limit values should be observed:

- the permissible pressure (PS) and the permissible temperature (TS) must be ≤ the pressure and temperature ratings specified in the supplement to this operating manual. The data on the factory tag/the data tag should be observed
- The maximum and/or minimum operating temperature limits specified in the equipment specification must not be exceeded
- The housing protection type is IP 67 in accordance with EN60529

Permissible measuring agents (fluids)

Caution!

- Media may only be used if, depending on state-of-the-art technology or the operating experience of the operator, it can be assured that materials of the components coming into contact with the measuring agents (process connection, measurement pipes and flow distributors) assure a minimum of 15 years of successful operation.
- Media with unknown properties may only be used if the operator can perform regular and suitable tests to assure the safe condition of the equipment.

Safety labels, symbols, data tags, factory tags and CE mark

All safety labels, symbols, the type plate and/or factory panel should be kept legible and replaced if damaged or lost. Note the following general information:

STOP	**Warning**	Indicates a risk or potentially hazardous situation which, if not avoided, could result in death or serious injury.
	Caution	Indicates a potentially hazardous situation or alerts against unsafe practices which, if not avoided, may result in injury of persons or property damage.
	Notice	Indicates a potentially harmful situation which, if not avoided, may result in damage of the product itself or of adjacent objects.
	Important	Indicates useful hints or other special information which, if not observed, could lead to a decline in operating convenience or affect the functionality (does not indicate a dangerous or harmful situation).
Ex	**Ex-protection**	This symbol identifies equipment with Ex-protection. For usage in Ex-areas, you must observe the information provided in the "Ex-protection" chapter.
CE	**CE-mark**	The CE mark indicates that the equipment corresponds to the following guidelines and satisfies their fundamental safety requirements: • **CE symbol on the type plate (on the measurement transformer)** – Compliance with the EMC Directive 89/336/EEC – Conformity with the Ex Directive 94/9/ EC (only for equipment with Ex-protection) • **CE symbol on the factory panel (on the measurement transformer)** – Conformity with the **P**ressure**E**quipment**D**irective (PED) 97/23/EC The factory panel of pressure equipment does not include the CE mark, if e.g.: – The max. permissible pressure (PS) is below 0.5 bar. – A registration procedure is not required as a result of the low pressure risks (nominal width ≤ DN 25 / 1").

Possible risks present during assembly

During assembly, ensure that:

- the flow direction corresponds to the marking.
- the instrument is installed on a stress free manner (e.g. parallel mating flanges) and is only installed with the specified seals.
- the piping in front of and behind the equipment is properly supported (refer to information in main operating manual).

Possible risks when used in Ex areas

Special specifications apply in Ex areas to the connection for auxiliary power and the switch output point. Observe the information provided on this subject in the Ex chapter of the main operating manual.

Possible risks during active operation

- Operations with abrasive fluids and/or cavitation may damage pressure containing parts.
- During the flow of hot media, contact with the surface may result in burns.
- Aggressive fluids may result in corrosion and abrasion. Pressurised fluids might escape prematurely.

Possible risks during servicing and maintenance

- Before working on the instrument (removing/opening), ensure that the instrument and if necessary adjacent lines or tanks are depressurised.

Notice!

- Before opening the equipment, check whether hazardous substances were used as the flow medium. There may be hazardous residue in the equipment and this may escape upon opening.
- If piping vibrations are present, we recommend securing the flange bolts and nuts to prevent them from loosening.
- Included in the responsibilities of the system operator are periodic inspections, to check:
  - the operation
  - the seals
  - the wear (corrosion, abrasion, cavitation)

Material loads

Notice!
Limits on the permissible temperature of the measuring agent (TS) result from the sensor sealing compound used. Refer to equipment's factory panel and type plate.

Non-compliance will result in destruction of the seal and equipment.

FAM3220/FAM3225 (10A3220/10A3225)

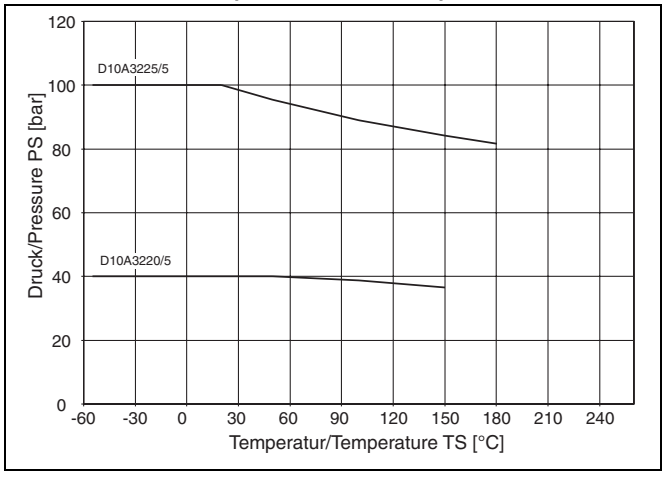

Principle of Operation

Armored Metal Tube Flowmeter Series FAM3200
The Series FAM3220 flowmeters are metal tube flowmeters in which a float moves in a tapered, vertical meter tube. These flowmeters provide a local indication of the instantaneous flowrate value and incorporate built-in alarm switches for monitoring the flowrate value. They are also available with a differential pressure regulator for flow control.

Fig. 1: FAM3200

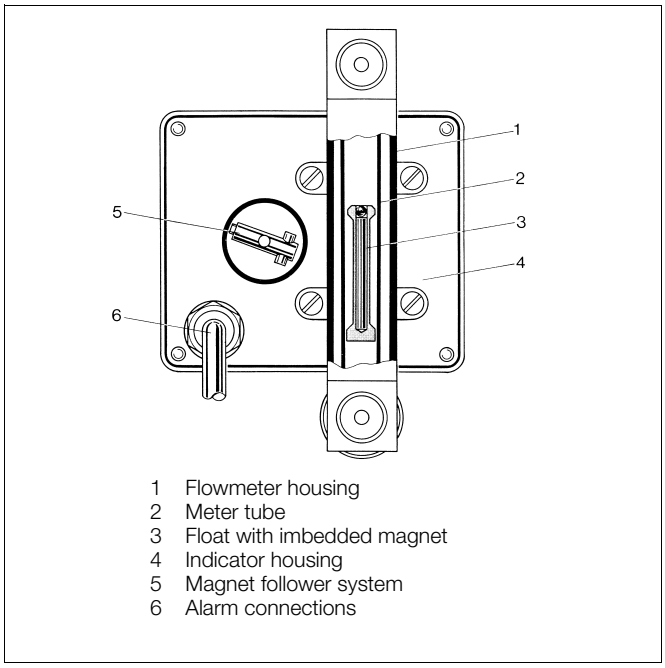

Fig. 2: Cross Section, Tapered Tube Concept

Installation

Installation Requirements

Caution!

- Remove the shipping protection.
- The installation orientation must be vertical.
- The flowmeter should be isolated from pipeline vibrations. Pipeline supports are sufficient in normal situations.
- Unobstructed in- and outlet sections are not required. Valves or elbows may be connected directly to the flowmeter.
- Observe the limits listed in the Specification sheet.
- Take care to avoid stray magnetic fields which could affect the metering results.
- When the flowmeter is to be installed in a pipeline in which interruption of service is undesirable or impossible, a bypass line should be installed as shown in Fig. 3.
- See also VDE/VDI Guideline 3513 Sheet 3 “Selection and Installation Recommendations for
- Variable Area Flowmeters“.
- Use slow opening valves.
- Pulsating flows should be avoided.
- Gas inclusions when metering liquids should be avoided.
- A float damping option is available.
- Sudden pressure shocks should be avoided.

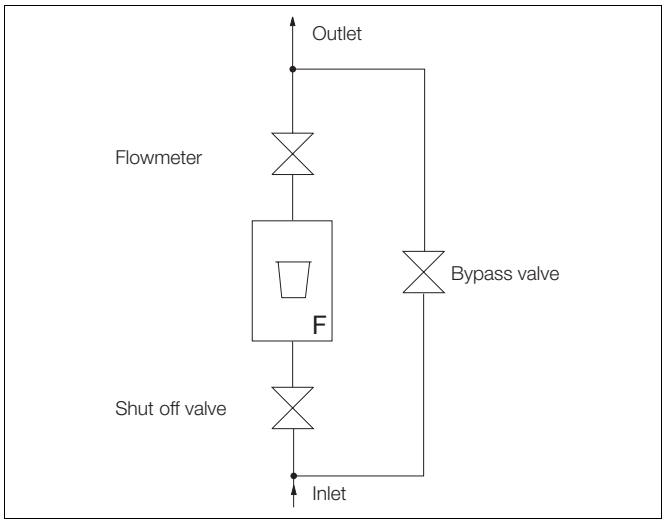

Fig. 3: Installation Example

Pressure Drop

The pressure which exists at the flowmeter must be sufficient to satisfy the pressure drop through the flowmeter primary. This pressure drop is made up of the constant pressure drop at the float and the pressure drop through the fittings and the flowmeter. The latter increases as the square of the flow velocity. The pressure drop values are listed in the Data sheet.

Minimum Required Pressure Drop for Gas

Even with pulsation free flows, spontaneous pulsations of the float are possible (float bounce). These pulsations generally occur when the critical volume before and after the float to the nearest throttle point up- or downstream from the flowmeter is exceeded and when both the pressure and flowrate are low. If the operating pressure is below the minimum value listed in the Specification sheet, it is possible to provide a design with gas damping to eliminate the pulsations.

To eliminate the self-induced compression pulsations the following measures can be employed:

- Select a flowmeter with the lowest pressure drop.
- Utilize short pipe sections between the flowmeter and the up- or downstream throttling locations.
- The inside diameter of the pipeline should not be larger than the flowmeter connection size.
- Reduce the flowrate range from the usual 10 % - 100 % to 25 % - 100 %.
- Set the flowrate by approaching the required value from a higher flowrate.
- Increase the operating pressure while taking into account the increase in the flowrate indication due to the increase in the gas density at the new operating conditions.

Fluids Containing Solids

For fluids which contain magnetic particles, such as iron filings, etc., the danger exists that these magnetic particles may become attached to the float. The accuracy will be affected in an adverse manner.

Caution
Corrosive metal particles are not allowed in Ex-Applications.

In such applications we recommend the use of a magnetic separator. During installation of the flowmeter it is positioned between the flanges of the pipeline and the meter.

In general, solid particles in the fluid cause increased mechanical friction and thereby increased wear on the float metering edge. In such installations an appropriate filter should be provided.

Warning Information

Caution!

- When cleaning the sight window, electrostatically charging of the window should be avoided. Use a damp rag.
- Assure that the flowmeter is only operated with fluids for which either technical information or operational experience of the user is available, which indicates that the chemical and physical properties of the gaskets and the fluid wetted parts in the flowmeter will not be adversely affected during the expected life of the flowmeter.
- A connection is located on the base plate for connection to the Potential Equalization.
- When Zone 0 exists in the meter tube the flowmeters may only be installed in an area where sufficient air flow exists to assure a Zone 1 environment.
- During installation and maintenance the requirements in Standards EN 50281-1-2 and EN 60079-14 are to be observed.

Specifications

O-Ring

Viton A: -20 °C ...+180 °C
Buna N: -20 °C ...+100 °C
Kalrez: -20 °C ...+180 °C

Caution!
Insulating the flowmeter primary does not increase the housing temperature if the indicator housing continues to be exposed to the ambient temperature.
If additional external heating of the flowmeter primary is to be installed by the user, assure that no additional temperature increase occurs in the indicator housing. The max. allow. temperature of the supplementary heating may not exceed the allowable fluid temperature.
When using external electrical heating the possible interaction from the electromagnetic field should be evaluated.

Zusätzl. Technische Daten für Geräte mit Schlitzinitiatoren

Electrical Specifications		Allow. Max. Fluid Temperature = f ($T_{Ambient}$, T_{Fluid})					
		Ambient Temperature 40 °C		Ambient Temperature 50 °C		Ambient Temperature 60 °C	
I_i [mA]	P_i [mW]	Buna N	Viton A Kalrez	Buna N	Viton A Kalrez	Buna N	Viton A Kalrez
25	34	100	180	100	165	100	155
25	64	100	180	100	165	100	155
52	169	100	130	100	115	100	100
76	242	80	80	65	65	50	50

Specifications Ex-Design

Identification

TÜV 03 ATEX 2151
II 1/2G c T6 or II 2D T115 °C (secondary instrument without Slot Initiator)
II 1/2G EEx c ia IIC T6 or II 2D T115 °C (secondary instrument without Slot Initiator)
Ambient temperature -20 °C ... +60 °C
The fluid temperature specifications are listed, page 7.
The temperatures for the Dust-Ex are a function of the max. possible surface temperature of Slot Initiators, (T115 °C) or of the fluid temperature. The higher of the 2 values is to be used.

O-Ring

Viton A: -20 °C ... +180 °C
Buna N: -20 °C ... +100 °C
Kalrez: -20 °C ... +180 °C

Caution!
Insulating the flowmeter primary does not increase the housing temperature if the indicator housing continues to be exposed to the ambient temperature.
An external additional heating of the flowmeter primary is to be installed by the user in such a manner that no additional temperature increase occurs in the indicator housing. The max. allow. temperature of the supplementary heating may not exceed the allowable fluid temperature.
The Slot Initiators may only be connected to certified intrinsically safe circuits.
When using external electrical heating the possible interaction of electromagnetic fields should be evaluated. The requirements in EN 60079-14 are to be observed.

Additional Safety Ex-Specifications for Flowmeters with Slot Initiators

Category 2

The following safety specifications apply to the Armored Purgemeters 10A323.. respectively FAM322.. as Category 2 (Zone 1) equipment: $T_{FLUID} = T_{AMBIENT} \geq -20$ °C

Safety Specifications for Designs with Slot Initiators					Allow. Max. Fluid Temperature = f ($T_{Ambient}$, T_{Fluid})											
					Ambient Temperature 40 °C				Ambient Temperature 50 °C				Ambient Temperature 60 °C			
U_i	I_i	P_i	C_i	L_i	T6	T5	T4	T3	T6	T5	T4	T3	T6	T5	T4	T3
16 V	25 mA	34 mW	30 nF	100 µH	85 °C	100 °C	135 °C	180 °C	85 °C	100 °C	135 °C	165 °C	85 °C	100 °C	135 °C	155 °C
	25 mA	64 mW			85 °C	100 °C	135 °C	180 °C	85 °C	100 °C	135 °C	165 °C	70 °C	100 °C	135 °C	155 °C
	52 mA	169 mW			50 °C	85 °C	130 °C	130 °C	35 °C	70 °C	115 °C	115 °C	25 °C	60 °C	100 °C	100 °C
	76 mA	242 mW			10 °C	50 °C	80 °C	80 °C	-	35 °C	65 °C	65 °C	-	25 °C	50 °C	50 °C

Category 1

Armored Purgemeters 10A322. respectively FAM322.. as Category 1 (Zone 0)
equipment: $T_{FLUID} = T_{AMBIENT} \geq -20$ °C; atmospheric conditions 0.8 bar to 1.1 bar

Safety Specifications for Designs with Slot Initiators					Allow. Max. Fluid Temperature = f ($T_{Ambient}$, T_{Fluid}								
					Ambient Temperature 40 °C			Ambient Temperature 50 °C			Ambient Temperature 60 °C		
U_i	I_i	P_i	C_i	L_i	T6	T5	T4	T6	T5	T4	T6	T5	T4
16 V	25 mA	34 mW	30 nF	100 µH	60 °C	60 °C	60 °C	60 °C	60 °C	60 °C	60 °C	60 °C	60 °C
	25 mA	64 mW			60 °C	60 °C	60 °C	60 °C	60 °C	60 °C	60 °C	60 °C	60 °C
	52 mA	169 mW			50 °C	60 °C	60 °C	35 °C	60 °C	60 °C	25 °C	60 °C	60 °C
	76 mA	242 mW			10 °C	50 °C	60 °C	-	35 °C	60 °C	-	25 °C	50 °C

Caution!
Category 1 refers to the interior of the meter tube. In such installations the Armored Flowmeter must be installed so that its ambient environment corresponds to Zone 1.

Specifications for Optional Accessories

Alarm Contacts for Model FAM3220/25[1)] (10A3220/25)

Alarm contacts can be installed in the housing which respond to max. and/or min. flowrates. They can be utilized to switch pumps, magnet valves etc. (Fig. 4).

The alarm transmitter consists of a slot initiator and a switch amplifier. The switch amplifier is installed separately outside of the indicator housing. A control vane actuates the alarm circuit when it enters the slot initiator. The slot initiator position can be set using a screwdriver.

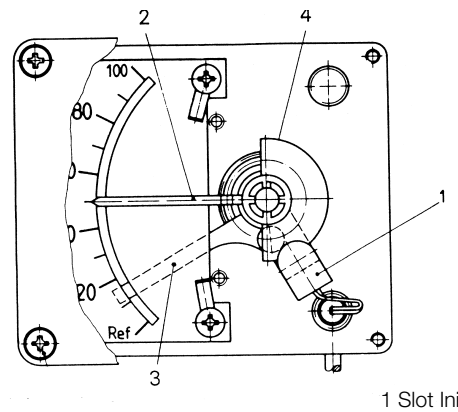

1 Slot Initiator
2 Pointer
3 Alarm setting
4 Control vane

Fig. 4: Armored Purgemeter FAM3220 (10A3220), Indicator with Single Alarm

Setting Switch Point

Single Alarm min. 0 to 60 %, max. 40 to 100 %
Double Alarm min. range setting approx. 5 %

Setting Accuracy

± 2 % of rate

1) Available as an option

Electrical Transmitter[1)] Modell FAM3250/55 (10A3250/55)

Notice!
The Models FAM3250/55 (10A3250/55) are flowmeters with an integral Angular Rotation Transmitter. The transmitter is mounted on the indicator shaft and converts the pointer indication into a proportional 4-20 mA current output signal. The models with the Angular Rotation Transmitter may **not be installed in Ex-Areas.**

Output signal4-20 mA-/2-Wire

U_{max}· 30 V
I_{max}· 30 mA

Ambient Temperature

-20 °C to +40 °C

Setting Zero

Position the pointer of the magnet follower system at the lowest scale graduation (e.g. percent scale=10 %, direct reading scale 30 - 300 l/h = 30 l/h). The output signal for this pointer setting can be calculated as follows:

Procentscale: $$I[mA] = \left(16mA \cdot \frac{\%min}{100}\right) + 4mA$$

D.R. Scale: $$I[mA] = \left(16mA \cdot \frac{Q_V min}{Q_V max}\right) + 4mA$$

The output signal, if necessary, can be adjusted with the “ZERO” potentiometer.

Setting Span

Position the pointer at the 100 % scale graduation or at the highest graduation on a direct reading scale. The potentiometer “SPAN” should be adjusted so that the output signal value is exactly 20 mA. It is recommended that the zero setting be rechecked.

Notice!
For non-linear scales, e.g. due to viscosity effects, a linearization unit is required. In many situations an adjustment made at a single point is satisfactory. If required, please contact the factory.

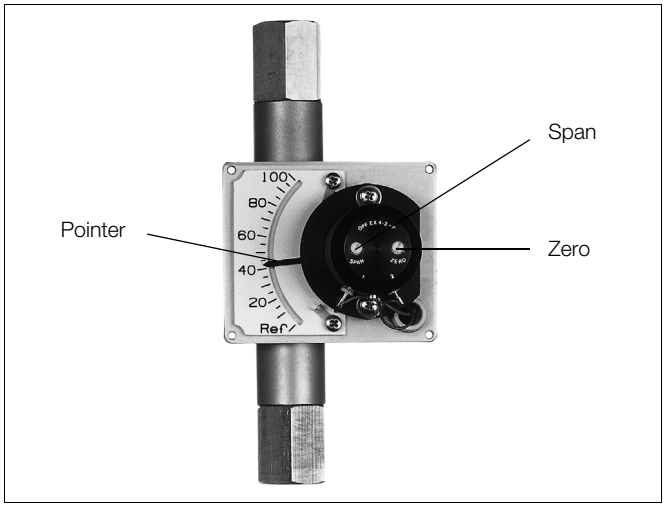

Fig. 5:

1) Available as an option

Differential Pressure Regulator Model FAM3220 (10A3220)

The differential pressure regulator is used in conjunction with the Armored Purgemeter. It maintains a constant flowrate through the flowmeter whose value is set using the needle valve.

Max. allow. Differential Pressure

7 bar

Connection Size

R1/4”

Materials

Housing

Stn. stl. 1.4571 [316Ti]

Diaphragm

Viton A (max. 180 °C)

O-Rings

Viton A

Springs

Stn. stl. 1.4401 [316]

Valve seat and shaft

Stn. stl. 1.4401 [316]

Connecting pipe

Stn. stl. 1.4301 [304]

Pipe coupling

Stn. stl. 1.4301 [304]

Fig. 6: Differential Pressure Regulator

Maintenance

Cleaning

The meter tube and float should be cleaned as frequently as necessary to maintain the accuracy of the flowmeter. Generally the flowmeter is removed from the pipeline for cleaning, inspection or repair of the meter tube or float.

Removal of the Float and Metering Tube

(see Parts List D184B127U01)

Vertical Connections

Loosen outlet fitting (2). Follow the instructions for horizontal connections

Horizontal Connections

Loosen threaded rod (16). Remove safety retainer ring (17). Remove pressure ring (14) and pressure piece (13).

Horizontal and Vertical Connections

Remove and clean meter tube holder (5), meter tube (6) and float (7). Check O-Ring (15) for possible damage and replace if necessary. Reassemble flowmeter in the reverse order

Replacement Part Orders

Please include the Instrument Serial No. when ordering replacement parts. The Serial No. may be found on the Instrument Plate which is attached to the housing cover.

Caution!

n order to assure proper operation and to avoid dangers, only original replacement parts obtained from the manufacturer should be used. The requirements in ATEX 137 are to be observed during maintenance operations.

Recommended Switch Amplifier for Alarm Signal Transmitter

A switch amplifier is required for the Alarm Signal Transmitter.

Amplifier		Supply Power	Channels
KFD2-SR2-Ex1.W	No. D163A011U03	24 V DC	1
KFA5-SR2-Ex1.W	No. D163A011U01	115 V AC	1
KFA6-SR2-Ex1.W	No. D163A011U02	230 V AC	1
KFD5-SR2-Ex2.W	No. D163A011U06	24 V DC	2
KFA5-SR2-Ex2.W	No. D163A011U04	115 V AC	2
KFA6-SR2-Ex2.W	No. D163A011U05	230 V AC	2

These Switch Amplifiers from Pepperl & Fuchs are examples. Others can be used equally as well.

Differential Pressure Regulator, Model 53RT2110 [1] for Model FAM3220 (10A3220)

The differential pressure regulator is used in conjunction with the Armored Purgemeter. It maintains a constant flowrate through the flowmeter whose value is set using the needle valve.

Max. allow. Differential Pressure

7 bar

Connection Size

R1/4”

Materials

Housing

Stn. stl. 1.4571 [316Ti]

Diaphragm

Viton A (max. 150 °C) *)

O-Rings

Viton A *)

Springs

Stn. stl. 1.4401 [316]

Valve seat and shaft

Stn. stl. 1.4401 [316]

Connecting pipe

Stn. stl. 1.4301 [304]

Pipe coupling

Stn. stl. 1.4301 [304]

*) For Ammoniak please use Buna N, max. 120 °C

[1] Available as an option

Flow Range Tables

Flow Range Table (1), Float and Meter Tube: FAM3220/25/50/50 (10A3220/25/50/50)

Maximum Flowrate [1]						
Water 1mPas;1kg/l [l/h]	Air 1013 mbar, 0°C [l/h] Q_N	Vstd [mPas] (2)	Pdif (3) [bar]	Psta (4) [bar]	Pmin (5) [bar]	D p (6) [mbar]
1	35	4	0.7	1.0	–	8
1.6	54	4	0.7	1.0	–	8
2.5	100	6	0.7	1.0	–	8
4	160	6	0.7	1.0	–	8
6	230	18	0.7	1.0	–	8
10	350	18	0.7	1.0	–	8
16	540	18	0.7	1.0	–	8
25	850	18	0.7	1.0	–	9
40	1250	18	0.7	1.0	–	10.5
60	1900	18	0.7	1.0	–	12.5
100	3100	12	–	1.0	–	17.0

Flow Range Table (2), Conical Float and Orifice: FAM3225/55 (10A3225/55)

Maximum Flowrate [1]						
Water 1mPas;1kg/l [l/h]	Air 1013 mbar, 0°C [l/h]Q_N	Vstd [mPas] (2)	Pdif (3) [bar]	Psta (4) [bar]	Pmin (5) [bar]	D p (6) [mbar]
100	3200	8	–	4.0	0.3	60
160	5000	8	–	4.0	0.3	70
200	6000	8	–	4.0	0.3	80
250	8000	8	–	4.0	0.3	90
300	9000	8	–	4.0	0.3	160
400	12000	8	–	4.0	0.3	75
500	15000	8			0.3	85
600	18000	8	–	4.0	0.3	95
800	24000	8	–	4.0	0.3	130
800	23800	3	–	16	0.4	60
1000	29700	3	–	16	0.4	62
1600	47600	3	–	16	0.4	74
2000	59500	3	–	16	0.4	85
2500	74400	3	–	16	0.4	105
3000	89300	3	–	16	0.4	130

(1) Flowrate scale in % or direct reading in engineering units for any fluid. Vertical or horizontal threaded connections.
(2) Vstd: max. viscosity without a calibration.
(3) Pdif: differential pressure required to operate the differential pressure regulator. Flow ranges identified by [–] are not suitable for differential pressure regulators.
(4) Psta: Minimum required static pressure to prevent float bounce (compression oscillations). Check with factory for low pressure applications.
(5) Pmin: Minimum required static pressure in the instrument when using a float dampener. (helix) »–« not available.
(6) Total pressure drop with a stn. stl. float at max. flowrate.

Mimensions FAM3220/25 (10A3220/25)

Model FAM3220 (10A3220) ≤ 100 l/h Water (horizontal pipe connections)

Model FAM3225 (10A3225) ≤ 800 l/h Water (certical pipe connections)

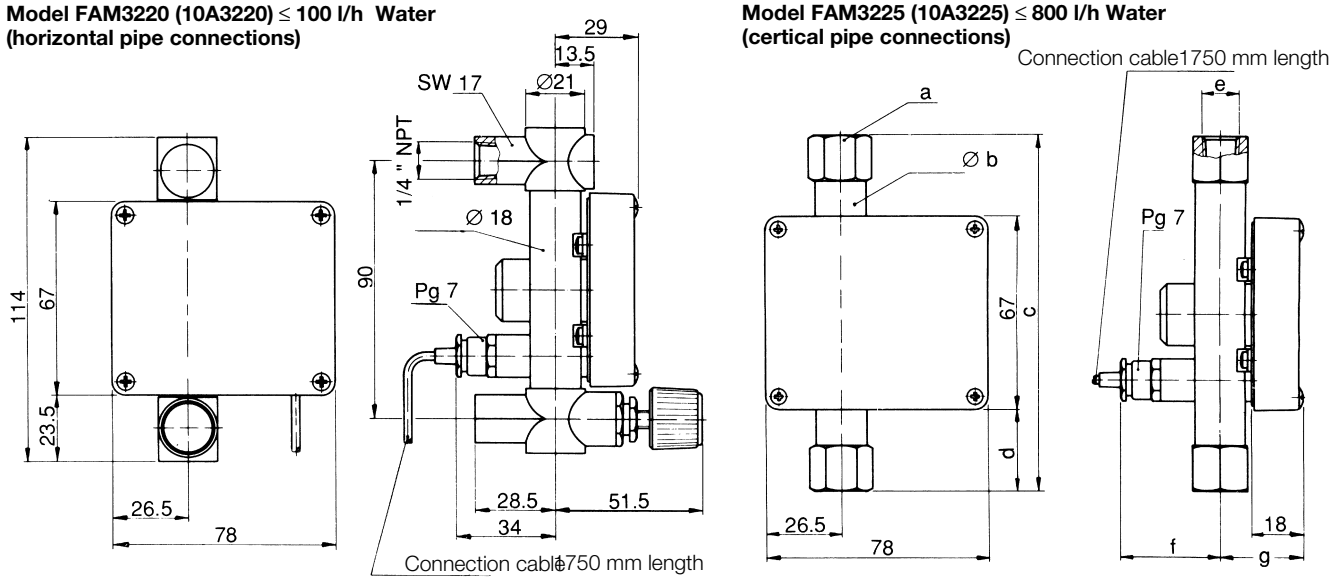

	a	Øb	c	d	e	f	g	Model
Flow range ≤ 100 l/h Water	SW19	18	125	29	1/4” NPT	34	29	FAM3220/25 (10A3220/25)
Flow range 100 l/h to 300 l/h Water	SW24	25	164	48,.	3/8” NPT	30,5	32.5	FAM3225 (10A3225)
Flow range ≤ 400 l/h to 800 l/h Water	SW27	25	164	48.5	1/2 NPT	30,5	32.5	FAM3225 (10A3225)
Flow range 800 l/h to 3000 Water	SW50	50	230	81	1” G 1” NPT	18	45/50	FAM3225 (10A3225)

All dim´s in mm

ISO Projection Method E

Fig. 7: Model FAM3220/25 (10A3220/25) to 800 l/h Water

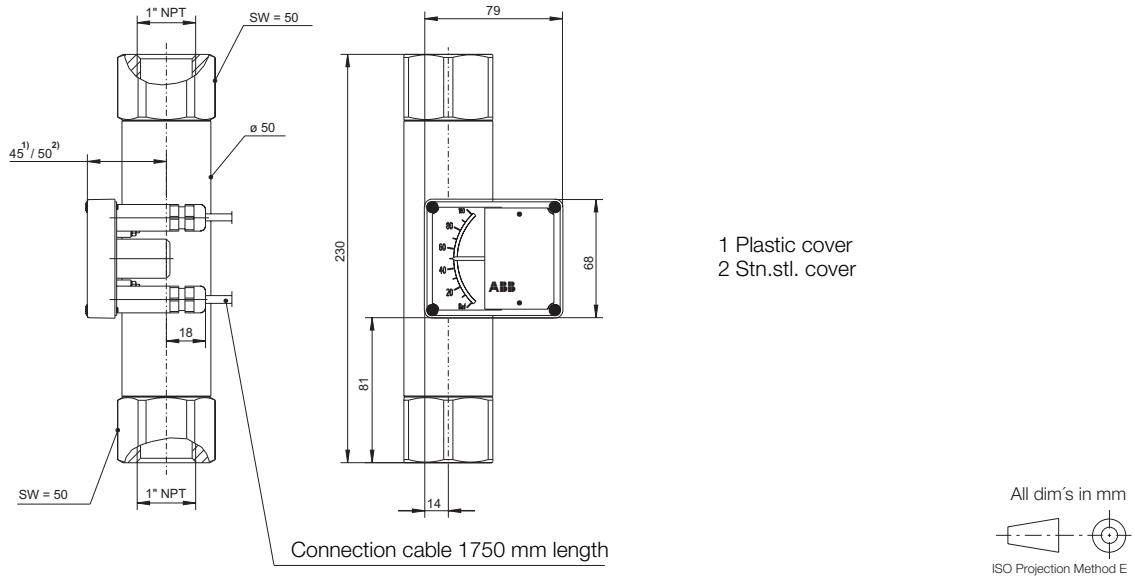

1 Plastic cover
2 Stn.stl. cover

Fig. 8: Model FAM3225 (10A3225) 800 to 3000 l/h Water

Dimensions FAM3250/55 (10A3250/55)

Model FAM3250 (10A3250) ≤ 100 l/h
Armored Purgemeter
with Electronic Converter

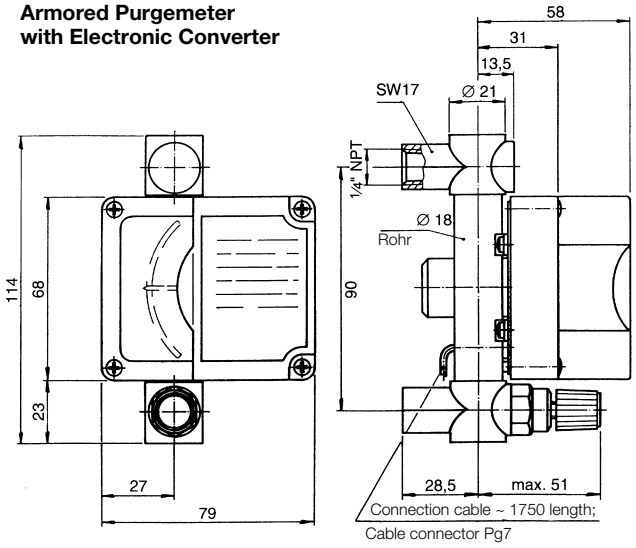

Model FAM3250/55 (10A3250/55) ≤ 800 l/h
Armored Purgemeter
with Electronic Converter

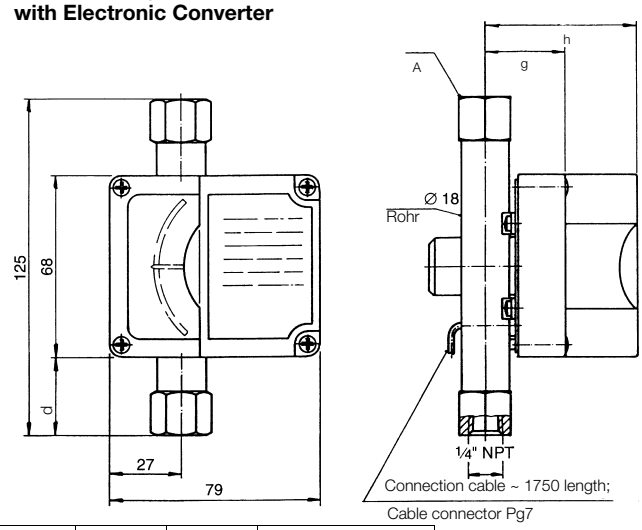

	a	b	c	d	e	g	h	Modell
Flow ranges ≤ 100 l/h Water	SW19	18	125	29	1/4” NPT	31	58	FAM3250/55 (10A3250/55)
Flow ranges 100 l/h to 300 l/h Water	SW24	25	164	48,5	3/8” NPT	34,5	61,5	FAM3255 (10A3255)
Flow ranges ≤ 400 l/h to 800 l/h Water	SW27	25	164	48,5	1/2 NPT	34,5	61,5	FAM3255 (10A3255)
Flow ranges 800 l/h to 3000 l/h Water	–	–	–	–	1” G 1” NPT	–	–	FAM3255 (10A3255)

SW = Size of Wrench

All dim´s in mm

ISO Projection Method E

Fig. 9: Model FAM3250 (10A3250) to 800 l/h Water

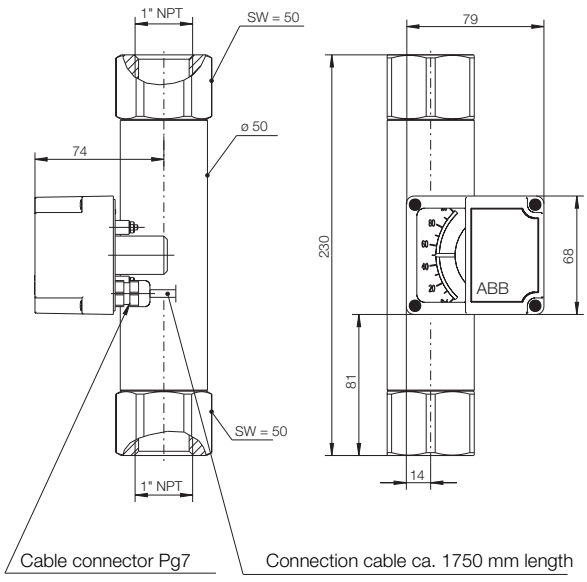

All dim´s in mm

ISO Projection Method E

Fig. 10: Model FAM3255 (10A3255), 800 to 3000 l/h Water

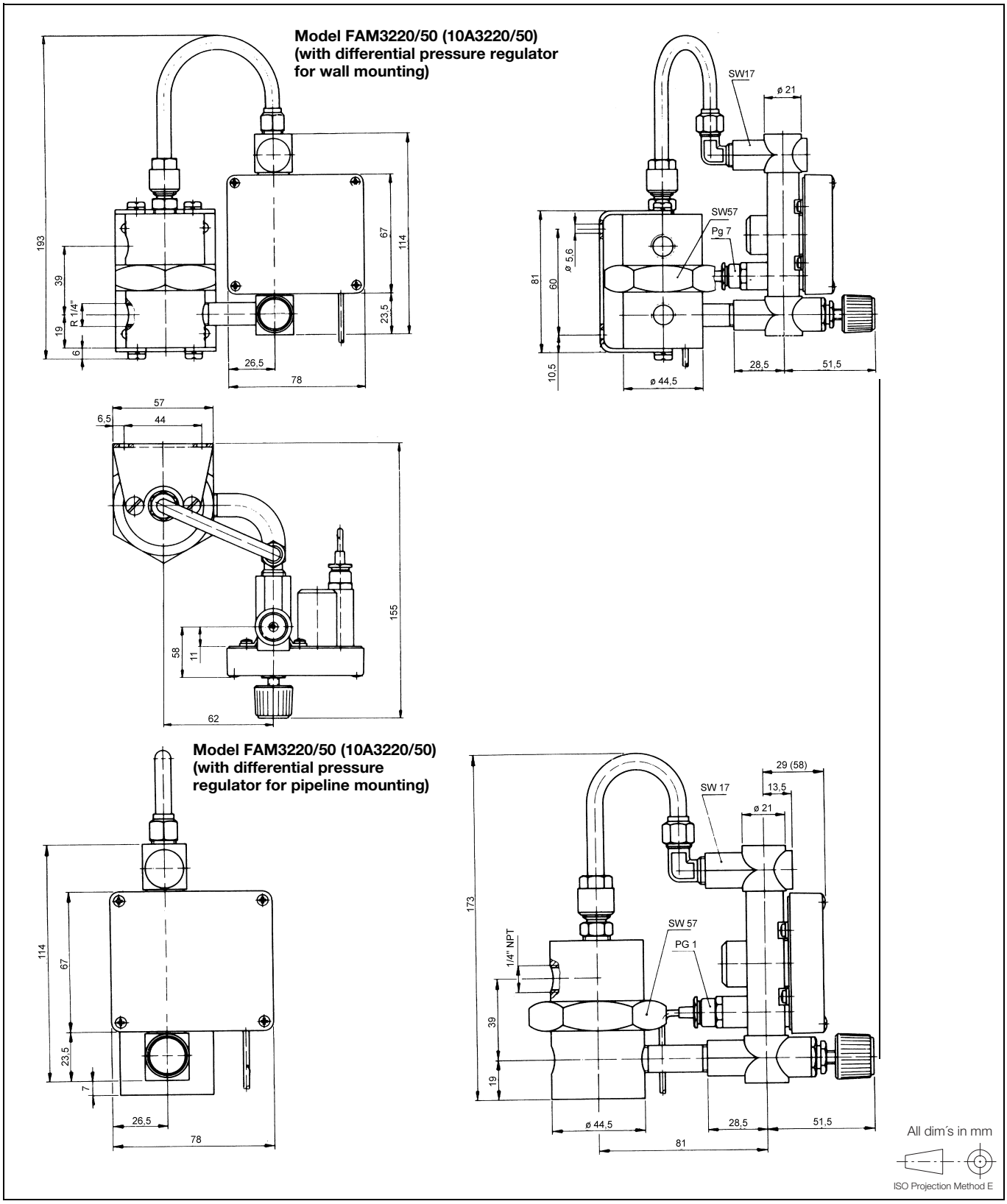
Model FAM3220/50 (10A3220/50)
(with differential pressure regulator
for wall mounting)
193
39
19
6
R 1/4"
67
114
23,5
26,5
78
SW17
ø 21
SW57
Pg 7
81
60
ø 5,6
10,5
ø 44,5
28,5
51,5
57
6,5
44
155
58
11
62
Model FAM3220/50 (10A3220/50)
(with differential pressure
regulator for pipeline mounting)
114
67
23,5
7
26,5
78
29 (58)
13,5
SW 17
ø 21
173
1/4" NPT
SW 57
PG 1
39
19
ø 44,5
28,5
51,5
81
All dim´s in mm
ISO Projection Method E

Fig. 11:

Ordering Information FAM3220/50 (10A3220/50)

Order Number	FAM32															
Secondary Instrument																
Indicator with/without alarm		2														
Indicator with electronic converter		5														
FAM3220: Instrument Design																
Horizontal, fitting design			0													
Design Level																
Secondary Instrument (Indicator)				A												
Primary Instrument (Flowmeter)				D												
FAM3220: Needle Valve, Position																
None					A											
Valve in inlet, standard					N											
Valve in outlet, standard					M											
Valve in inlet, DVGW-Design					Q											
Valve in outlet, DVWG-Design					R											
FAM3220: Materials, Meter Pipe Holder/ O-Rings																
PVDF/ Viton A						1										
PVDF/ Buna N						2										
PTFE/ Kalrez						3										
None/Viton A						4										
None/Buna N						5										
None/Kalrez						6										
FAM3220: Materials Fittings																
1.4571 [316Ti]							T									
FAM3220: Materials Housing Pipe																
1.4571								T								
Certifications (Primary Instrument)																
None									A							
Material DIN 500493.1B (vertical design only)									B							
Pressure test									C							
Material DIN 500493.1B and pressure test (vertical design only)									D							
Others									Z							
FAM3220: Float construction																
Standard, without twisted guide rod										0						
Housing Design																
Polycarbonate, (Makralon), standard											A					
Stn. stl., glass window, flat housing											C					
Deep housing											D					
Same as C: Base plate & cover stn. stl.											E					
Same as D: Base plate & cover stn. stl.											F					
Output																
Indicator												0				
With min.alarm												1				
With max.alarm												2				
With min. & max.alarm												3				
With current output 4–20 mA, 2-wire Ex-design												4				
FAM3220: Differential Pressure Regulator																
None													A			
Material, brass													B			
Material, stn. stl. 1.4571 [316Ti]													T			
FAM3220: Mounting																
Pipeline mounting														1		
Wall mounting														2		
Others														9		
FAM3220: Meter Connections																
1/4” NPT, Standard															A	
FAM3220: Accessories																
None																A
With SERTOconnector, SS, 6 mm																B
With SERTOconnector, SS, 8 mm																C
With hose connector, SS, for hose ID ∅ 6.4 mm																D
With hose connector, SS, for hose ID ∅ 8.0 mm																E
Name Plate																
German																D
English																E

Ordering Information FAM3225/55 (10A3225/55)

Order Number	FAM32																
Secondary Instrument																	
Indicator with/without alarm		2															
Indicator with electronic converter		5															
FAM3225: Instrument Design																	
vertical, pipe construction			5														
Design Level																	
Secondary Instrument (Indicator)				A													
Primary Instrument (Flowmeter)				D													
FAM3225: Needle Valve, Position																	
No valve					A												
FAM3225: Materials, Meter Tube holder/ O-Rings																	
PVDF/ Viton A						1											
PVDF/ Buna N						2											
PTFE/ Kalrez						3											
None/Viton A						4											
None/Buna N						5											
None/Kalrez						6											
FAM3225: Materials, Fittings																	
1.4571, (1/4", 3/8",1/2" NPT, ≤ 800 l/h Water)							T										
FAM3225: Materials Housing Pipe																	
1.4571								T									
Certifications (Primary Instrument)																	
None									A								
Material DIN 500493.1B									B								
Pressure test									C								
Material DIN 500493.1B and pressure test									D								
Others									Z								
FAM3225: Float construction																	
None										0							
With twisted guide rod										1							
Housing Design																	
Polycarbonate, (Makralon), standard											A						
Stn. stl., glass window, flat housing											C						
Deep housing											D						
Same as C: Base plate & cover stn. stl.											E						
Same as D: Base plate & cover stn. stl.											F						
Output																	
Indicator												0					
With min.alarm												1					
With max.alarm												2					
With min. & max.alarm												3					
With current output 4–20 mA, 2-wire not Ex-design												4					
FAM3225: Differential Pressure Regulator																	
None													A				
FAM3225: Mounting																	
Pipeline mounting														1			
Others														9			
FAM3225: Meter Connections																	
1/4" NPT, standard (1–100 l/h Water)															A		
3/8" NPT, standard (100–300 l/h Water)															K		
1/2" NPT, option (100–800 l/h Water)															M		
1" NPT, standard (800–3000l/h Water)															P		
1" G, (800–3000 l/h Water)															Q		
Others															Z		

Order Number	FAM32															
FAM3220: Accessories																
None															**A**	
1/4” NPT, Standard (1–100 l/h Water)																
With SERTO-connector, SS, 6 mm															**B**	
With SERTO-connector, SS, 8 mm															**C**	
With hose connector, SS, for hose ID ∅ 6.4 mm															**D**	
With hose connector, SS, for hose ID ∅ 8.0 mm															**E**	
3/8” NPT, Standard (100–300 l/h Water)																
With SERTO-connector, SS, 12 mm															**P**	
With hose connector, SS, for hose ID ∅ 10.0 mm															**G**	
With hose connector, SS, for hose ID ∅ 12.7 mm															**H**	
1/2” NPT, Standard (400–800 l/h Water)																
With SERTO-connector, SS, 15 mm															**L**	
With hose connector, SS, for hose ID ∅ 12.7 mm															**P**	
Name Plate																
German																**1**
English																**5**

EU-Certificate of Compliance

ABB

EG-Konformitätserklärung
EC-Certificate of Compliance

CE Ex

Hiermit bestätigen wir die Übereinstimmung der
Herewith we confirm that our

Ganzmetall-Durchflussmesser
Armored-Flowmeter

Modell 10A322.. / FAM322..
Model

mit den grundlegenden Sicherheits- und Gesundheitsanforderungen gem. der Richtlinie 94/9/EG des Rates der Europäischen Gemeinschaft. Die Sicherheits- und Installationshinweise der Produktdokumentation sind zu beachten.
are in compliance with the Essential Health and Safety Requirements with refer to the council directives 94/9/EC of the European Community. The safety and installation requirements of the product documentation must be observed.

Die Ganzmetall-Durchflußmesser dienen zur Messung des Durchflusses von Gasen und Flüssigkeiten.
The Armored Flowmeters are utilized to meter the flowrate of gases or liquids.

EG-Baumusterprüfbescheinigung: TÜV 03 ATEX 2151
EC-Type Examination Certificate:

Benannte Stelle: *Notified Body:*	TÜV Hannover/Sachsen-Anhalt e.V., Kennummer 0032
Geräte-Kennzeichnung: *Apparatus code:*	II 1/2 G c T6 bzw. II 1/2 G EEx c ia IIC T6 bzw. II 2 D T115°C *II 1/2 G c T6 rsp. II 1/2 G EEx c ia IIC T6 rsp. II 2 D T115°C*
Sicherheitstechnische Daten: *Safety values:*	siehe EG-Baumusterprüfbescheinigung TÜV 03 ATEX 2151 *refer to EC-Type Examination Certificate TÜV 03 ATEX 2151*
Angewandte Normen: *Standards:*	EN 13 463-1:2001

Göttingen, 16. Juni 2003

i.V.

Unterschrift / *Signature*

BZ-13-8015, Rev.1, 6029

ABB Automation Products GmbH

Postanschrift:
Dransfelder Str. 2
D-37079 Göttingen

Besuchsanschrift:
Dransfelder Str. 2
D-37079 Göttingen
Telefon +49 (0) 551 905 0
Telefax+49 (0) 551 905 777
Internet: http://www.abb.com/de

Sitz der Gesellschaft:
Eschborn
Registergericht:
Amtsgericht Frankfurt/Main
Handelsregister:
HRB 49651
USt-IdNr.: DE 115 300 097

Vorsitz des Aufsichtsrates:
Bernhard Jucker
Geschäftsführung:
Heinz-Peter Paffenholz (Vorsitz)
Joachim Braun
Erik Huggare
Dr. Peter Terwiesch

Bankverbindung:
Commerzbank AG Frankfurt
Konto: 589 635 200
BLZ: 500 400 00

EU-Type Examination Certificate

Translation of German Original

(1) **EC-Type Examination Certificate**

(2) Equipment or Protective Systems intended for use in potentially explosive atmospheres - Directive 94/9/EC.

(3) EC-Type Examination Certificate No

TÜV 03 ATEX 2151

(4) Instrument: Variable Area Flowmeter Models 10A322. and FAM322.

(5) Manufacturer: ABB Automation Products GmbH

(6) Address: D-37079 Göttingen, Dransfelder Straße 2, Germany

(7) The equipment and any acceptable variation thereto is specified in the schedule to this certificate and documents therein referred to.

(8) The TÜV NORD CERT GmbH & Co. KG, TÜV Certification Body No. 0032 in accordance with Article 9 of the Council Directive of the European Community of 23 March 1994 (94/9/EC) certifies that this equipment or protective system has been found to comply with the Essential Health and Safety Requirements relating to the design and construction of equipment and protective systems intended for use in potentially explosive atmospheres given in Annex II of the directive.

The examination and test results are recorded in the confidential Report No. 03YEX550611.

(9) Compliance with the Essential Health and Safety Requirements has been assured by compliance with

EN 13 463-1:2001

(10) If the sign "X" is placed after the certification number, it indicates that the equipment or protective system is subject to special conditions for safe use specified in the schedule to this certificate.

(11) With refer to Directive 94/9/EC this EC-Type Test Examination Certificate relates only to the design and construction of the specified equipment. Further requirements of this Directive apply to the manufacture and supply of these equipment. This requirements are not part of this certificate.

(12) The markings for the equipment shall include the following specifications:

II 1/2 G c T6 or II 1/2 G EEx c ia IIC T6 or II 2 D T115°C

TÜV NORD CERT GmbH & Co. KG
TÜV CERT- Certification Body
Am TÜV 1
D-30519 Hannover, Germany
Phone: (+49) 511 986-1470
Fax: (+49) 511 986-2555

Hannover, 13 June 2003

p.p. Schwedt

Head of the Certification Body

Page 1/3

Translation of German Original

(13) **S C H E D U L E**

(14) **EC-Type Examination Certificate No. TÜV 03 ATEX 2151**

(15) Description of the Equipment

The Variable Area Flowmeter Models 10A322.and FAM322. in meter sizes ¼", $^3/_8$", ½" and 1" are none electrical apparatus and are used to measure the flowrates of gases and liquids.
The Variable Area Flowmeter Models 10A322.and FAM322. may be installed and operate in hazardous areas defined for Category 2-Equipments (Gas and Dust).The internal volume of the metering tube corresponds to Category 1 (Gas).
Separate certified electrical apparatus (Initiators) according to EC-Type Examination Certificate PTB 99 ATEX 2219 X or PTB 00 ATEX 2049 X may be installed inside of the indicator housing for limit detection.

Electrical Specifications

Initiator Circuits (cable junction)	Ignition Class Intrinsically Safe EEx ia IIC Only for connection to a certified Intrinsically Safe circuit with the following maximum values: U_i = 16V I_i see table P_i see table Effective internal capacitance: 30 nF Effective internal inductance: 0,1 mH

The relationship between the maximum allowable Fluid Temperature, Ambient Temperature T_{AMB}, Temperature Classes and Electrical Data of the Initiators are listed in the table below:

Electrical Data		Maximum allowable Fluid Temperature [°C]								
I_i [mA]	P_i [mW]	T_{AMB} = 40°C			T_{AMB} = 50°C			T_{AMB} = 60°C		
		T6	T5	T4	T6	T5	T4	T6	T5	T4
25	34	60	60	60	60	60	60	60	60	60
25	64	60	60	60	60	60	60	60	60	60
52	169	50	60	60	35	60	60	25	60	60
76	242	10	50	60	--	35	60	--	25	50
		Minimum allowable Fluid Temperature						-20°C		
		Allowable Process Pressure inside the Metering Tube						0,8 to 1,1bar		

Translation of German Original

Schedule to EC-Type Examination Certificate No. TÜV 03 ATEX 2151

The information in the manufacturer instruction manual obtain in addition to this table.

With refer to the Dust Ignition Proof the temperature is T115°C or T_{MEDIUM}.
The highest temperature is relevant.

(16) Test documents are listed in the Test Report No. 03 YEX 550611

(17) Special Conditions

none

(18) Essential Health and Safety Requirements

none additionally

Contact us

ABB Ltd.
Process Automation
Oldends Lane, Stonehouse
Gloucestershire, GL10 3TA
UK
Phone: +44 (0)1453 826661
Fax: +44 (0)1453 829671

ABB Inc.
Process Automation
125 E. County Line Road
Warminster PA 18974
USA
Phone: +1 215 674 6000
Fax: +1 215 674 7183

ABB Automation Products GmbH
Process Automation
Dransfelder Str. 2
37079 Goettingen
Germany
Phone: +49 551 905-534
Fax: +49 551 905-555

www.abb.com

D184S042U02 Rev. 03 01.2011

Power and productivity
for a better world™